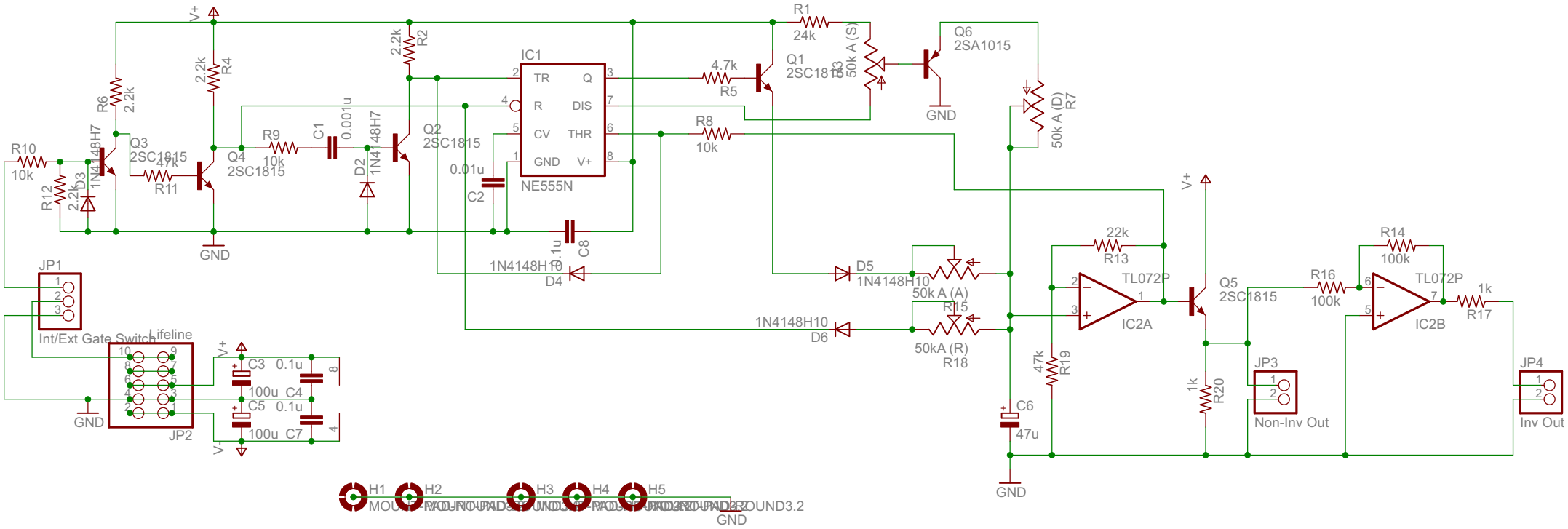
V+
R1
24k
R2
2.2k
R4
2.2k
R6
2.2k
IC1
TR
Q
R
DIS
CV
THR
GND
V+
NE555N
4.7k
R5
Q1
2SC1815
R3
50k A (S)
Q6
2SA1015
GND
R7
50k A (D)
R8
10k
R10
10k
R12
2.2k
D3
1N4148H7
Q3
2SC1815
47k
R11
Q4
2SC1815
R9
10k
C1
0.001u
D2
1N4148H7
Q2
2SC1815
0.01u
C2
C8
0.1u
1N4148H10
D4
GND
D5
1N4148H10
50k A (A)
R15
1N4148H10
D6
50kA (R)
R18
22k
R13
TL072P
IC2A
Q5
2SC1815
R14
100k
R16
100k
TL072P
IC2B
1k
R17
47k
R19
1k
R20
C6
47u
GND
JP1
Int/Ext Gate Switch
Lifeline
JP2
GND
C3
0.1u
100u
C4
C5
0.1u
100u
C7
JP3
Non-Inv Out
JP4
Inv Out
H1
H2
H3
H4
H5
GND